CROSS
WITH CROSSED SQUARES

PRICE FROM 10.1.2022 **+10%**

design Luigi Brembilla

Interwoven squares and rectangles to create a radiator with an unusual look.

Can be used as a towel-heater, or simply a decorative feature in any room.

The geometric shapes can be multiplied at will, always resulting in a harmonious whole.

DIMENSIONS
Width: 48/56/64/88/96/120/128/152/168 cm
Height: 48/56/64/88/128/152/168/184 cm
Depth: 11 cm
Depth from wall: 13,5 cm

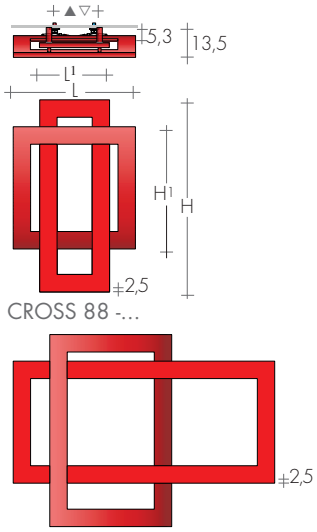

CROSS 88 -...

CROSS 88-120

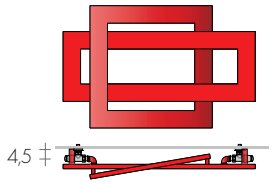

CROSS 48-88
CROSS 56-88
CROSS 64-96

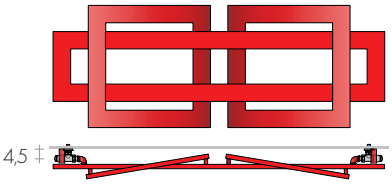

CROSS 48-128 / 56-152 / 64-168

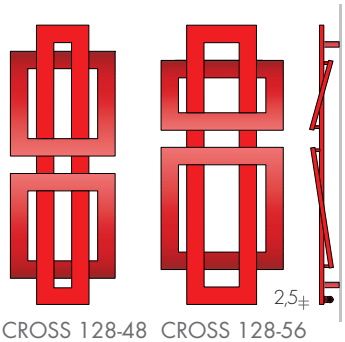

CROSS 128-48 CROSS 128-56

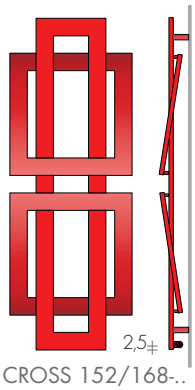

CROSS 152/168-..

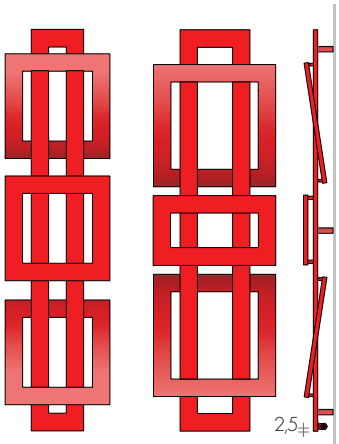

CROSS 184-48 CROSS 184-..

MODEL	H-L cm	white sablé standard €		EN 442 Δt 50 K watt	EN 442 Δt 30 K watt	▲▽ t.c. cm	Height H (H1) cm	Width L (L1) cm	Weight M Kg	Volume V dm³	MIXED version (EHE cl.II) with sleeve and: cable◊ €	digital thermostat W	digital thermostat €
CROSS	48-88	636,20	◗	394	208	74	48 (24)	88	7,9	4,8	110,80	400	173,10
CROSS	48-128	883,20	◗	635	335	114	48 (24)	128	12,8	7,7	114,60	650	176,90
CROSS	56-88	662,40		429	227	74	56 (32)	88	8,6	5,2	110,80	400	173,10
CROSS	56-152	957,40	◗	772	408	138	56 (32)	152	15,6	9,4	118,80	800	181,10
CROSS	64-96	718,50		480	253	82	64 (32)	96	9,7	5,9	112,70	500	175,00
CROSS	64-168	1001,50		892	471	154	64 (32)	168	17,6	10,7	121,90	900	177,40
CROSS	88-48	624,40	◗	394	208	19	88	48 (24)	7,9	4,8	110,80	400	173,10
CROSS	88-56	649,90		429	227	19	88	56 (32)	8,6	5,2	110,80	400	173,10
CROSS	88-120	778,10	◗	617	327	106	88	120 (56)	12,4	7,5	114,60	650	176,90
CROSS	128-48	876,40	◗	623	329	19	128	48 (24)	12,8	7,7	114,60	650	176,90
CROSS	128-56	914,80		656	346	19	128	56 (32)	13,5	8,2	114,60	650	176,90
CROSS	152-48	921,50	◗	673	355	19	152	48 (24)	13,8	8,4	114,60	650	176,90
CROSS	152-56	949,20	◗	757	400	19	152	56 (32)	15,6	9,4	118,80	800	181,10
CROSS	168-64	1014,40		875	462	19	168	64 (32)	18,7	11,3	121,90	900	184,20
CROSS	184-48	1139,30	◗	890	470	19	184	48 (24)	18,7	11,3	121,90	900	184,20
CROSS	184-56	1188,20	◗	956	505	19	184	56 (32)	20,0	12,1	121,90	900	184,20
CROSS	184-64	1238,50		1038	548	19	184	64 (32)	21,8	13,2	121,90	900	184,20

◗ Ready Stock (Δt 40K = W Δt 50K x 0,755) ◊Radio frequency chronothermostat p.227

STANDARD PRODUCTION
White "sablé" paintwork - B70 brackets
Tolerance ± 3mm - Air vent ø 1/8"
MAXIMUM OPERATING PRESSURE 4 BAR

PRODUCTION ON REQUEST
Paintwork to Brem color list with colored B70 brackets +15/25%
Electric versions e.Cross, p.242

STANDARD FITTING
REG ø 1/2"
On request fitting ø 3/8"
Special fittings, page 287

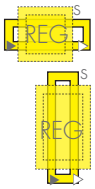

TAPPING CENTRES

Horizontal models

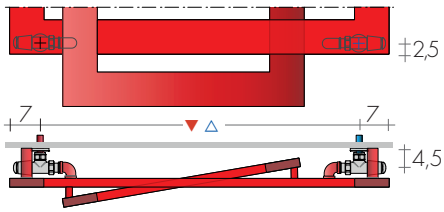

Vertical models

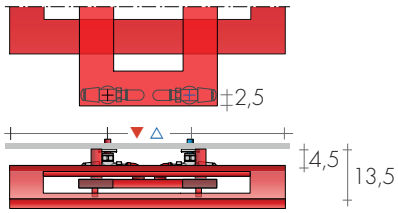

TECHNICAL DATA p.57

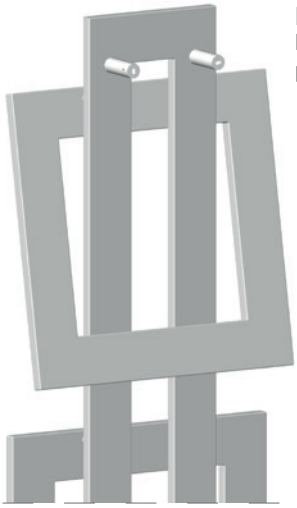

FIXINGS
Brackets included
position page 57

RECOMMENDED VALVES

as standard at the rear of the radiator

CHROME PLATED VALVES KIT WITH:
- n°2 Valves with O-ring Tangs
- n°2 Fittings (multilayer ø16, copper ø12,14)
- n°2 Round washers

On request: Polished stainless tube cover
(to be cut to right size) Art. CA18 10,80€

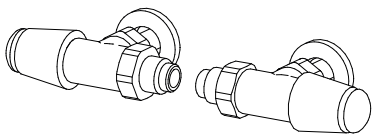

REVERSE TON VALVES KIT
page 277 Art. KVR 119,20€

QUADRA COLORED VALVES page 279

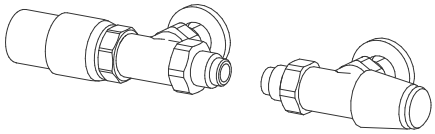

REVERSE TON VALVES KIT with
THERMOSTATIC head Art. KTR 165,50€

REMOTE FITTINGS Art. REM 36,60€
tapping centres ▲▽ L[1] - 6cm

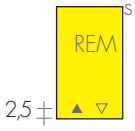

REMOTE VALVES ASSEMBLY KIT p. 281 with:
- n°2 Fittings (multilayer ø16, copper ø12,14)

REMOTE TON VALVES ASSEMBLY KIT
Art. KVG 153,60€

REMOTE TON VALVES ASSEMBLY KIT with
THERMOSTATIC head Art. KVGT 199,80€

CROSS TECHNICAL DATA (CROSSED SQUARES)

TAPPING CENTRES AND FITTINGS

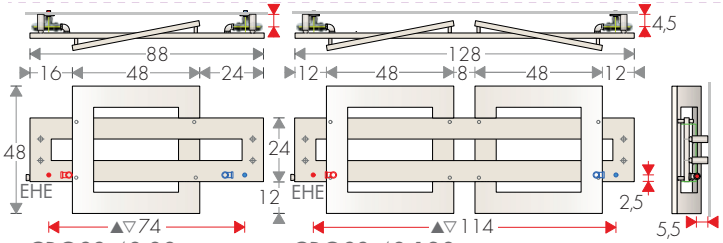

CROSS 48-88 CROSS 48-128

▶ M delivery
▷ R return

EHE: Sleeve for Electric Heating Element (on request)

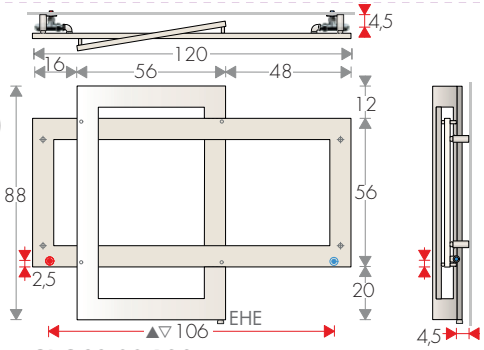

CROSS 88-120

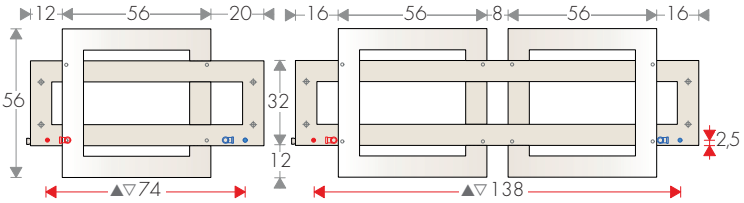

CROSS 56-88 CROSS 56-152

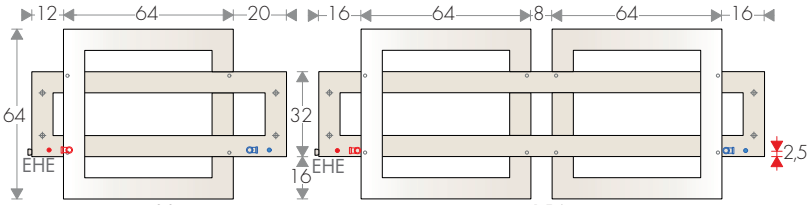

CROSS 64-96 CROSS 64-168

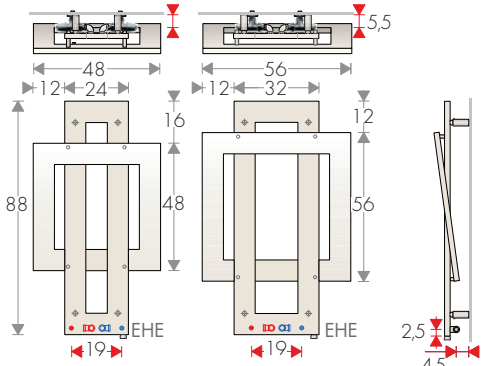

CROSS 88-48 CROSS 88-56

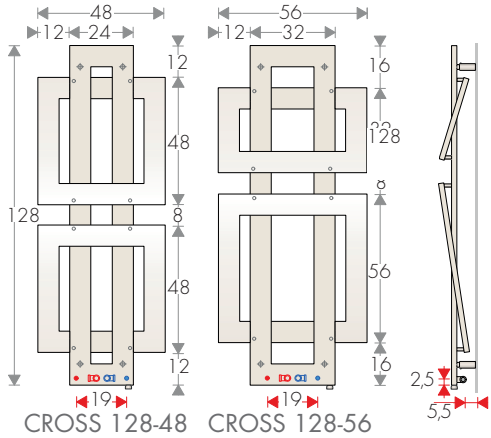

CROSS 128-48 CROSS 128-56

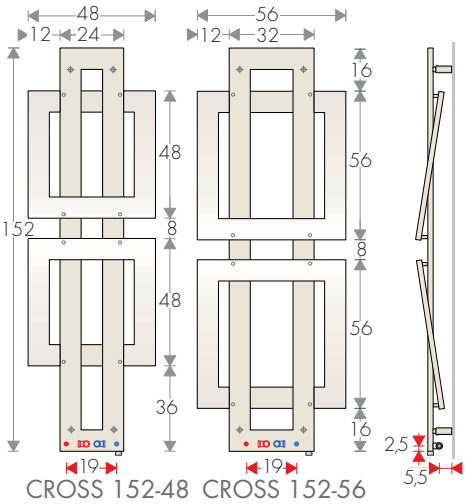

CROSS 152-48 CROSS 152-56

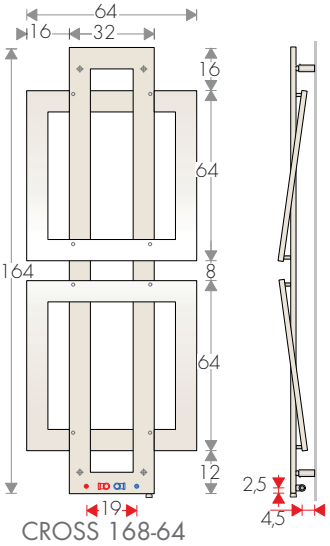

CROSS 168-64

BRACKETS POSITION

HORIZONTAL models

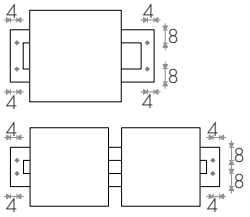

VERTICAL models

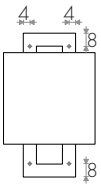

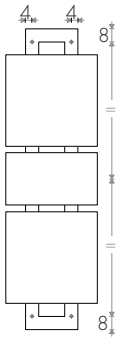

TAPPING CENTRES

with REVERSE VALVES

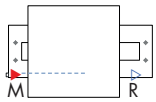

E.H.E.: Electric Heating Element in C

▶ M delivery
▷ R return

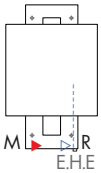

E.H.E.: Electric Heating Element in G

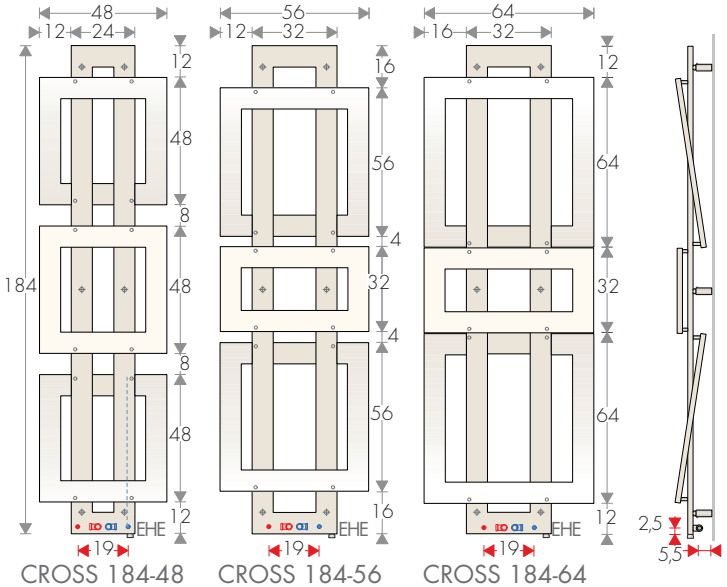

CROSS 184-48 CROSS 184-56 CROSS 184-64